Small Apron - Double Sided

Child-15”x20”

ACCEPTABLE FILE FORMATS:

Adobe Illustrator: .ai, .pdf, .eps
Photoshop: .psd, .tif, .eps, .jpg

Native Files are BEST

Fabric Color:
Logo Color:
Quantity:

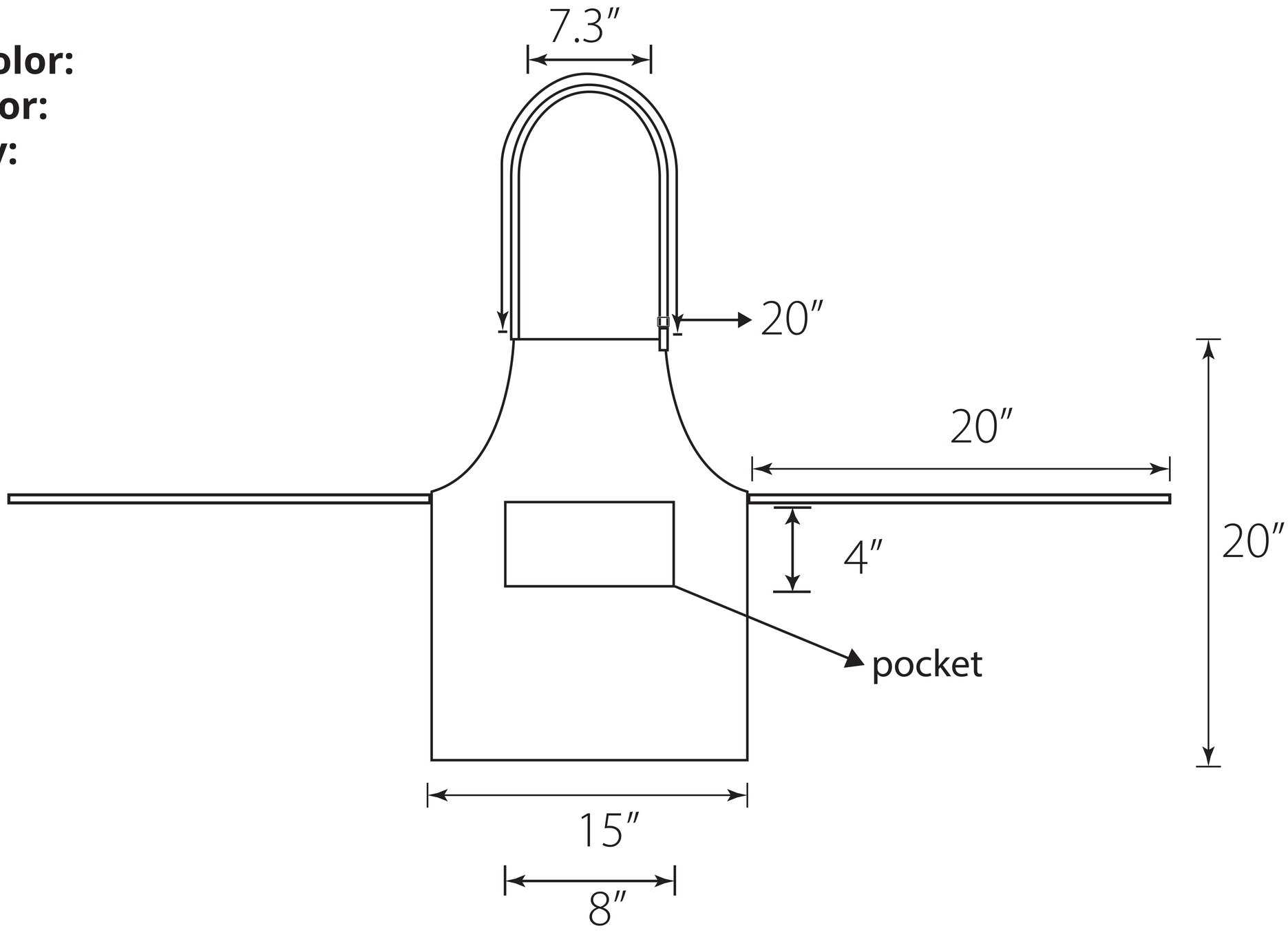

Front

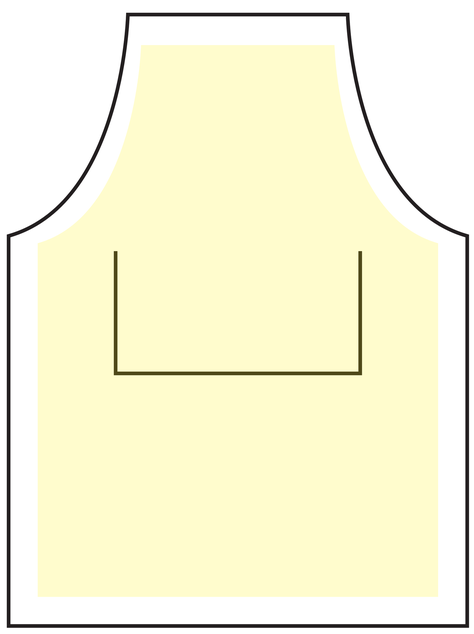

Back

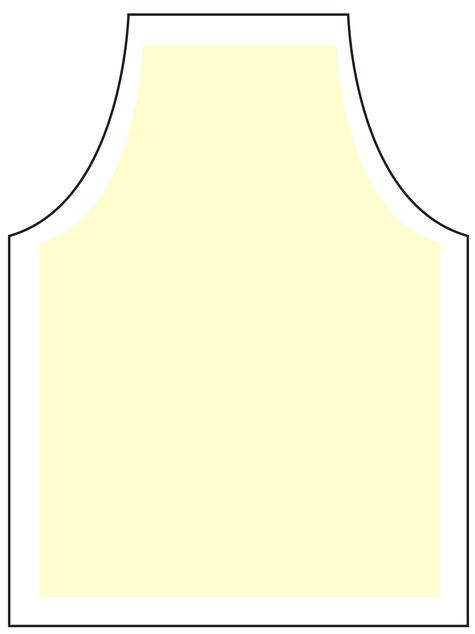

Pocket

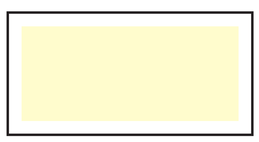

Bind

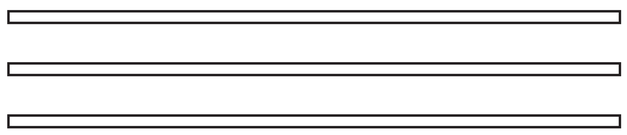

EMBED ALL IMAGES AND OUTLINE ALL TEXT

Keep all important text and Logos inside YELLOW Safe Area

To be used properly, this template must be opened in a vector based graphic program like Adobe Illustrator.